Public Notices

Certificate

To the Clerk of
Thomas County,
State of Kansas

We, the undersigned, duly elected, qualified, and acting officers of
Colby Cemetery District #1
certify that: (1) the hearing mentioned in the attached publication was held;(2) after the Budget Hearing this Budget was duly approved and adopted as the maximum expenditure for the various funds for the year.

Table of Contents:		Page No.	Amended 2006 Budget Expenditures	Amount of Tax to be Levied
Fund	K.S.A.			
General			172,186.00	77,390.00
Totals		xxxxxxxxx		
Publication				
Final Assessed Valuation				

Attest: Feb 21, 2006
Shelly A. Harms
County Clerk

Assisted by:
Gene D. Rickerson
Lyman S. Rice

(Published in the Colby Free Press on March 1, 2006.)

Morgan Township — Morgan Township — 12/31/2005

Receipts

Date	Payee	Description	General Fund	Road Fund	Weed Fund
02/08/05	Thomas County Treasurer	Tax Disbursement	9,365.84	26,478.10	3,244.86
03/25/05	Thomas County Treasurer	Tax Disbursement	472.20	2,940.77	165.23
06/08/05	Thomas County Treasurer	Tax Disbursement	4,754.13	14,627.03	1,647.09
09/29/05	Thomas County Treasurer	Tax Disbursement	2,278.05	7,543.59	808.70
11/15/05	Thomas County Treasurer	Tax Disbursement	224.32	1,823.48	80.04
12/31/05	Sunflower Bank	Interest	1,233.74		
			18,328.28	53,412.97	5,945.92

Recapitualation

		Totals all Funds	General Fund	Road Fund	Weed Fund
01/01/05	Balance to Date	58,678.68	54,475.30	4,203.38	
	Receipts	77,687.17	18,328.28	53,412.97	5,945.92
	Disbursements	54,650.56	15,716.33	37,169.86	1,764.37
01/10/06	Balance to Date	81,715.29	57,087.25	20,446.49	4,181.55
	Money Market Fund	81,545.03			
	Checking Account	170.26			
	Total Cash	81,715.29			

(Published in the Colby Free Press on March 1, 2006.)

ANNUAL REPORT OF Rovohl **TOWNSI**

Thomas **COUNTY, KANSAS**

The undersigned treasurer and trustee of Rovohl Township, submit the follo report for the year ending December 31, 20 05.

FINANCIAL REPORT

Fund*	Cash Balance Jan. 1 **	Total Receipts	Total Expenditures	Cash Balance Dec. 31	Un 1
General	844.67	2200	900.41	2144.26	
Road Fund	0	-	0	0	
0	0			0	
0	0			0	
0	0			0	
0	0			0	
0	0			0	

* Detailed fund pages are available at the county clerk's office.
** Includes all money the township has including checking account, savings, and investments.

I certify that this financial report is a correct summary of all money received and expended as we all unpaid bills for the township during the year ending December 31, 20 05.

Date: 1-11-06
Township Treasurer

(Published in the Colby Free Press on March 1, 2006.)

ANNUAL REPORT OF EAST HALE TOWNSHIP

THOMAS COUNTY, KANSAS

The undersigned treasurer and trustee of EAST HALE Township, submit the following report for the year ending December 31, 2005.

FINANCIAL REPORT

Fund*	Cash Balance Jan. 1 **	Total Receipts	Total Expenditures	Cash Balance Dec. 31	Unpaid Bills Dec. 31
General	5895.08	7024.06	8950.02	3969.12	0
Road Fund	0	-	0	0	0
0	0			0	
0	0			0	
0	0			0	
0	0			0	
0	0			0	

* Detailed fund pages are available at the county clerk's office.
** Includes all money the township has including checking account, savings, and investments.

I certify that this financial report is a correct summary of all money received and expended as well as all unpaid bills for the township during the year ending December 31, 2005.

Date: 13 January 2006
Township Treasurer

(Published in the Colby Free Press on March 1, 2006.)

ANNUAL REPORT OF Summers **TOWNSHIP**

Thomas **COUNTY, KANSAS**

The undersigned treasurer and trustee of Summers Township, submit the following report for the year ending December 31, 20 05.

FINANCIAL REPORT

Fund*	Cash Balance Jan. 1 **	Total Receipts	Total Expenditures	Cash Balance Dec. 31	Unpaid Bills Dec. 31
General	4142.88 0	9544.74 0	12089.76 0	1597.86 0	0 0
Road Fund	4989.72 0	51524.09 -	54464.04 0	2049.77 0	0 0
Emp Ben 0	1313.70 0	4915.48	5810.48	418.70 0	0
Weed 0	1228.65 0	7241.78	7229.95	1240.48 0	0
Sp Mach 0	51416.88 0	1869.70	15601.47	37685.11 0	0
0	0			0	
0	0			0	

* Detailed fund pages are available at the county clerk's office.
** Includes all money the township has including checking account, savings, and investments.

I certify that this financial report is a correct summary of all money received and expended as well as all unpaid bills for the township during the year ending December 31, 2005.

Date: 1-19-06
Township Treasurer

(Published in the Colby Free Press on March 1, 2006.)

When you're looking for that special something, look in the Classifieds!

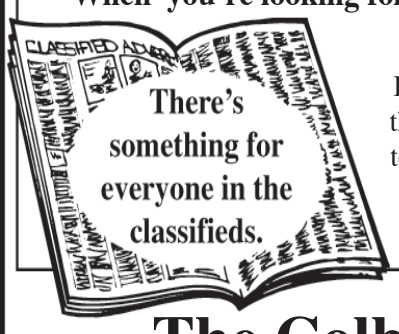

It pays in lots of ways to be in the Classifieds! Call **462-3963** to place your ad, or stop in the office so you won't miss out on any of the bargains!

155 W. 5th
The Colby Free Press

ANNUAL REPORT OF South Randall **TOWNSHIP**

Thomas **COUNTY, KANSAS**

The undersigned treasurer and trustee of South Randall Township, submit the following report for the year ending December 31, 20 05.

FINANCIAL REPORT

Fund*	Cash Balance Jan. 1 **	Total Receipts	Total Expenditures	Cash Balance Dec. 31	Unpaid Bills Dec. 31
General	184.03 0	6100.01 0	6128.05 0	155.99 0	0
Road Fund	390.20 0	52,893.96	52,895.76 0	388.40 0	0
Weed Fund 0	1,583.46 0	8148.62	7,667.22	2,064.86 0	
0	0			0	
0	0			0	
0	0			0	
0	0			0	

* Detailed fund pages are available at the county clerk's office.
** Includes all money the township has including checking account, savings, and investments.

I certify that this financial report is a correct summary of all money received and expended as well as all unpaid bills for the township during the year ending December 31, 20 05.

Date: Jan 17-06
James J. Hacker
Township Treasurer

(Published in the Colby Free Press on March 1, 2006.)

ANNUAL REPORT OF N. Randall **TOWNSHIP**

Thomas **COUNTY, KANSAS**

The undersigned treasurer and trustee of N. Randall Township, submit the following report for the year ending December 31, 20 05.

FINANCIAL REPORT

Fund*	Cash Balance Jan. 1 **	Total Receipts	Total Expenditures	Cash Balance Dec. 31	Unpaid Bills Dec. 31
General	0 0	33,905.69 0	33,905.69 0	0 0	0 0
Road Fund	0	-	0	0	0
Special Machinery 0	1064.03 0	31,726.06	29,790.09	3000 0	0
0	0			0	
0	0			0	
0	0			0	
0	0			0	

* Detailed fund pages are available at the county clerk's office.
** Includes all money the township has including checking account, savings, and investments.

I certify that this financial report is a correct summary of all money received and expended as well as all unpaid bills for the township during the year ending December 31, 20 05.

Date: 1-25-06
Township Treasurer

(Published in the Colby Free Press on March 1, 2006.)

Decompress with all your favorite syndicated comic strip characters, right here..... Monday through Friday.

It's guaranteed to put a smile on your face!!

Colby Free Press
155 W. 5th • 462-3963
Your Choice for News, Sports & Information

The Colby Free Press...

Getting the News to You

Keep up with all the local and area news plus any upcoming events with a subscription to The Colby Free Press!

Bring in or mail this ad and receive $5.00 OFF a NEW subscription!

The Colby Free Press
155 W. 5th
462-3963

ANNUAL REPORT OF MENLO **TOWNSHIP**

THOMAS **COUNTY, KANSAS**

The undersigned treasurer and trustee of MENLO Township, submit the following report for the year ending December 31, 2005.

FINANCIAL REPORT

Fund*	Cash Balance Jan. 1 **	Total Receipts	Total Expenditures	Cash Balance Dec. 31	Unpaid Bills Dec. 31
General	-0-	29451.64	29451.64	-0-	-0-
EMPLOYEE BEN	1155.96	2534.75	2819.17	871.54	-0-
SPECIAL EQUIP	9626.79	13272.76	19626.79	3272.76	-0-
0	0			0	
0	0			0	
0	0			0	
0	0			0	

* Detailed fund pages are available at the county clerk's office.
** Includes all money the township has including checking account, savings, and investments.

I certify that this financial report is a correct summary of all money received and expended as well as all unpaid bills for the township during the year ending December 31, 2005.

Date: JANUARY 31, 2006
Susan D. Guill
Township Treasurer

(Published in the Colby Free Press on March 1, 2006.)

ANNUAL REPORT OF Barrett **TOWNSHIP**

Thomas **COUNTY, KANSAS**

The undersigned treasurer and trustee of Barrett Township, submit the following report for the year ending December 31, 20 05.

FINANCIAL REPORT

Fund*	Cash Balance Jan. 1 **	Total Receipts	Total Expenditures	Cash Balance Dec. 31	Unpaid Bills Dec. 31
General	3778.95 0	49,608.23 0	49,640.24 0	3146.94 0	4,063.20 0
Road Fund	0	-	0	0	0
0	0			0	
0	0			0	
0	0			0	
0	0			0	
0	0			0	

* Detailed fund pages are available at the county clerk's office.
** Includes all money the township has including checking account, savings, and investments.

I certify that this financial report is a correct summary of all money received and expended as well as all unpaid bills for the township during the year ending December 31, 20 05.

Date: 1-10-06
Township Treasurer

(Published in the Colby Free Press on March 1, 2006.)

Routine screening and prompt treatment can reduce deaths from breast and cervical cancer.

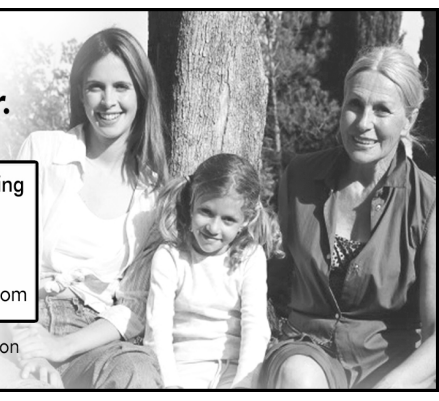

early detection **works**

call to see if you qualify for a free screening

Shelley Nelson
620-275-5302
www.preventionworkskansas.com

A message from the Kansas Department of Health and Environment, Cancer Information Service, Susan G. Komen Breast Cancer Foundation, and American Cancer Society.

Waconda Boats and Motors

Annual Open House Sale

Celebrating 30 Years of Business!

March 6 thru 12, 2006 • Republican City, NE

SHOW HOURS 8 A.M. TO 5 P.M.

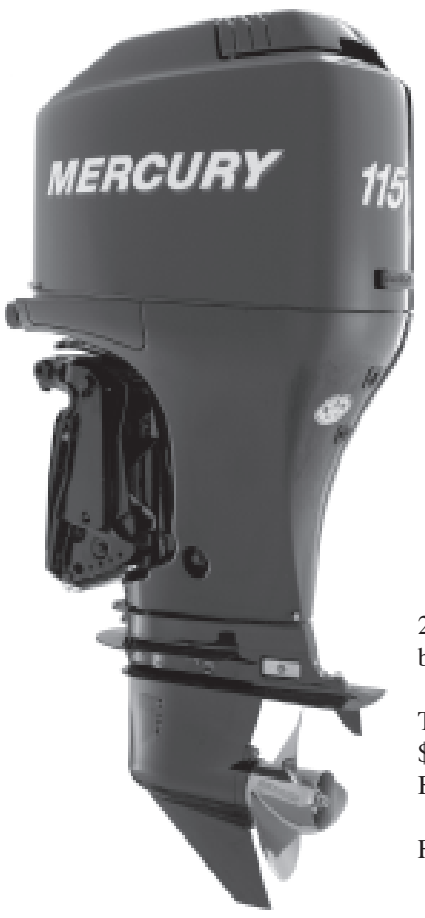

2006 Lund & Larson, Fish and Ski Boats
Starcraft and Lowe Pontoons & Deckboats
powered by Mercury

Top trade-in Allowances — Financing As Low As 5.99% to qualified buyers
Prices slashed with factory rebates on all new and remaining carry over models.
Check out the new LUND Classics more affordable than ever!

20-30% off boating accessories

TCW111 bulk oil
$10.95 per gal.
Bring your own jugs

Free refreshments

Lowrance sonar demonstrations
Sat. & Sun., March 11 & 12
By Neil Stuhmer

Register for prizes

Bring the family
Games for the kids

Waconda Boats & Motors
Show Hours: 8 a.m. to 5 p.m.
308-799-5000
www.wacondaboats.com

POWER YOU CAN FEEL.
RELIABILITY YOU CAN COUNT ON.
VERADO. UNEQUALLED POWER AND PROVEN RELIABILITY.
MERCURY VERADO TAKE CHARGE.
mercurymarine.com